Technical Manual

Installation



OPTIM®

DWV Sanitary Systems

Plumbing and Drainage Solutions

MARLEY by aliaxis

Quality Assurance

› Rigorous quality testing

› IANZ accredited laboratory

Certification

› Made to AS/NZS 1260 Standard

› ISO 9001 accreditation

› BRANZ Appraisal 1236

Proven Reliability

› Trusted since 1978

› Manufactured for the NZ market

Full Range

› Over 300 pipes and fittings

› Compatible system

Recyclable

› uPVC recycling programme

› ISO 14001 certified

› Use of recycled materials in pipes

Support

› Nationwide Territory Managers

› Award-winning customer service

Introduction

Marley NZ has been part of Kiwi homes and businesses for over 65 years, established in 1959 Marley is part of the Aliaxis group of companies. Aliaxis is a privately-owned business based in Belgium that employs 15,700 people across 44 countries, made up of more than 100 companies.

The information contained in this Installation Manual relates to the Marley NZ range of OPTIM® uPVC pipes and fittings manufactured at sites in New Zealand. Additional information relating to Aliaxis products manufactured in Australia that complement the OPTIM® range have been included.

BRANZ Appraised
Appraisal No. 1236 [2023]

OPTIMAL OPTIM® DWV PERFORMANCE

Contents

Introduction

1. uPVC Pipe Properties

1.1 Service Temperature
1.2 Durability
1.3 Weatherability
1.4 Chemical Resistance of PVC

2. Product Data

2.1 Standards and Certifications
2.2 New Zealand Green Building Council
2.3 Dimensions
2.4 Stiffness Classes
2.5 Pipe Marking

3. Jointing Methods

3.1 Solvent Joint
3.2 Rubber Ring Joint
3.3 Encapsulated Rubber Ring Joint

4. Installation Sanitary Plumbing

4.1 Waste and Vents Above Ground
4.2 Floor Waste Gully (FWG)
4.3 Gully Traps
4.4 Overflow Gully and Overflow Relief
4.5 Basins
4.6 Baths, Showers and Washing Machines
4.7 Kitchen Sinks
4.8 Laundry Tubs
4.9 Bends in Fixture Discharge Pipes
4.10 Waste Pipe Discharge
4.11 50mm Vertical Section of a Soil Waste Stack
4.12 Waste Stack DN65
4.13 Single Stack Systems
4.14 Single Stack Modified Systems
4.15 Converge – Reduced Velocity Aerator Stack Systems (RVASS)
4.16 Elevated Drainage Principles (EDP)
4.17 Concrete Slab
4.18 uPVC Pipe Supports

5. Installation Drainage

5.1 Inspection Openings
5.2 Bends
5.3 Junctions
5.4 Gradient – Number of Discharge Units
5.5 Excavation
5.6 Trench Width
5.7 Pipe Laying
5.8 Pipe Bed Preparation
5.9 Bedding
5.10 Side Support and Backfill
5.11 Pipe Cover
5.12 Anchoring on Steep Slopes
5.13 Pipe Bending Radius
5.14 Jointing into a Concrete Manhole

6. Testing and Commissioning Non-Pressure Pipelines

6.1 Hydrostatic Test
6.2 Low Pressure Air Test
6.3 Vacuum Testing

7. Handling and Storage

7.1 Unloading and Handling
7.2 Stacking
7.3 Storage
7.4 Stringing

8. Marley OPTIM DWV Sanitary Systems Range

Disclaimer
This manual is designed to provide guidance to the Designer/Installer of the Marley OPTIM DWV range of pipes and fittings to comply with the requirements of the NZBC Clauses G13 and B2, as well as the requirements of AS/NZS 3500.2 – Plumbing and drainage, Part 2: Sanitary plumbing and drainage. It is not intended to substitute any of the regulations.

1. uPVC Properties

1.1 Service Temperature

Marley drains, wastes and vents are suitable for the continuous discharge of liquids at temperatures up to 60°C for vertical pipes and grade pipes, as well as intermittent discharges of liquid up to 90°C where the duration of the discharge does not exceed 90 seconds.

For discharge of liquids at temperatures above 60°C but not exceeding 75°C graded pipes and fittings must be continuously supported. uPVC must not be used for continuous discharge of liquids at temperatures exceeding 75°C.

1.2 Durability

Marley OPTIM DWV fully complies with G13/AS2 Table 1 Materials for drainage pipes and E1/AS1 Table 1 Acceptable pipe materials.

When installed and used in accordance with the installation instructions Marley OPTIM DWV will meet the requirements of the New Zealand Building Code (NZBC) Clause B2 for:

- 50 years for systems with difficult access, (e.g. under buildings)
- 15 years for systems with a moderate ease of access, but difficult to replace, (e.g. typical drainage system laid adjacent to a building foundation).

1.3 Weatherability

Marley OPTIM DWV has as part of the raw material makeup 1.5 PHR of Titanium Dioxide to provide UV protection during storage. The ultimate strength of uPVC does not alter markedly with age. With prolonged exposure to UV light, a loss of impact strength can be expected, although changes are minor and should not reduce the system's long-term performance.

Marley recommends that standard AS/NZS 2032 – Installation of uPVC Pipes, should be followed when storing uPVC pipe for extended periods.

For above ground systems, extra UV light protection can be added by applying a coat of 100% acrylic paint. Pipes should be washed with detergent and water to remove any grease and dirt. If priming is required, use an alkyd-based general-purpose primer before the acrylic finishing coats. Additional occasional maintenance should be carried out to ensure the acrylic paint is in good order.

1.4 Marley OPTIM Corrosion and Chemical Resistance in Drains

Sanitary drains generate significant volumes of hydrogen sulphide gas from bacterial action, which results in the generation of dilute Sulphuric and Sulphurous acids especially in turbulent areas. Marley OPTIM DWV has excellent resistance to Sulphuric Acid.

Period of contact	In many instances the rate of attack is very slow and is only significant if exposure is prolonged, concentrate, or at elevated temperature. If highly stressed, deterioration can involve absorption of the corroding medium, which leads to swelling, a reduction in tensile strength and a change in elongation at break.
Joints	Consideration must be given to the effects of any solution on solvent or rubber ring joints. DWV pipes are fitted with blended natural rubber rings complying to AS 1646 and encapsulated rings manufactured using synthetic EPDM Rubber with a polypropylene reinforcement component approved in accordance with EN681-1 and approved for contact with potable water.

For more information refer to the chemical resistance chart on the resource page of the Marley website. www.marley.co.nz

2. Product Data

2.1 Standards and Certifications

Marley NZ uPVC is manufactured in compliance with AS/NZS 1260 - PVC-U Pipes and fittings for drain, waste and vent applications. The range also holds Branz Appraisal 1236.

Certifications:

- Bureau Veritas Lic No: 2365 – Marley OPTIM DWV (Manurewa)
- Bureau Veritas Lic No 2802 – Marley OPTIM DWV (Ashburton)
- Bureau Veritas Lic No: 2818 – Compakt
- WaterMark WMK20224 – Marley OPTIM range of fitting
- WaterMark WMKA1246 – Converge Reduced Velocity Aerator Stack System

Pipes and fittings manufactured by Marley that comply with AS/NZS 1260 also meet the requirements of AS/NZS 5395 – Best Environmental Practice uPVC Pipe and Fittings.

ISO-Regulated Production Site:

- **ISO 9001**
- **ISO 14001**

2.2 New Zealand Green Building Council (NZGBC)

NZGBC defines a "Responsible Product" as a product that has a Responsible Product Value (RPV) issued by an initiative recognised by them.

OPTIM DWV pipes and fittings are "Responsible Products" recognised by two approved product certification schemes registered in the Responsible Products Programme.

EPD Australasia – Product-specific EPD:

For pipes and fittings manufactured in New Zealand

PIPA:

- AS/NZS 1254:2010, PVC-U pipes and fittings for stormwater and surface water applications
- AS/NZS 1260:2017, PVC-U pipes and fittings for drain, waste and vent applications

When these schemes are selected from the Score Checker, it will calculate an RPV that contributes towards Green Star and Homestar credits.

The RPV is the score given by NZGBC to an initiative.

2.3 Dimensions

All Marley OPTIM DWV pipes are manufactured to comply with AS/NZS 1260 and as such have standard dimensions for the outside diameter, the wall thickness however changes based on the stiffness class of the pipe being manufactured, the below chart shows all OPTIM DWV pipe dimensions.

Nominal Size DN	Stiffness Class	Mean OD mm	Socket OD mm	Minimum Effective Sealing Length mm
32	-	36.35	32.05	-
40	-	42.95	38.35	-
50	-	55.85	50.95	-
65	-	68.90	63.10	-
80	-	82.50	76.00	-
100	SN6	110.20	107.00	45
100	SN10	110.20	106.35	45
100	SN16	110.20	101.40	45
150	SN4	160.25	152.25	47
150	SN8	160.25	150.25	47
150	SN16	160.25	147.65	47
175	SN4	200.30	190.30	65
175	SN8	200.30	186.90	65
175	SN16	200.30	185.10	65
225	SN4	250.35	237.55	75
225	SN8	250.35	234.65	75
225	SN16	250.35	230.75	75
300	SN4	315.45	299.65	85
300	SN8	315.45	295.05	85
300	SN16	315.45	290.85	85
375	SN8	400.50	375.40	95
375	SN16	400.50	369.00	95
475	SN8	500.00	469.80	105
475	SN16	500.00	460.80	105

2.4 Stiffness Classes

Marley OPTIM DWV pipes are manufactured to different pipe stiffness classes to suit the performance requirements of the installation.

SN4 and SN6 – these pipes are suggested for plumbing and domestic use and for general municipal drainage.

SN8 and SN10 – suitable for general drainage and commercial installation where higher pipe stiffness is required to provide minimum deflection of installed pipes.

SN16 and Greater Territorial Authority – this pipe is designed to meet the requirements of the Territorial Authority where very high long-term stiffness is required to provide minimal ovality due to high imposed traffic loads or very high coverage depths and to accommodate varying bedding performance.

2.5 Pipe Marking

All Marley OPTIM DWV pipes are continuously printed along the lengths with the following details at approximately one metre intervals.

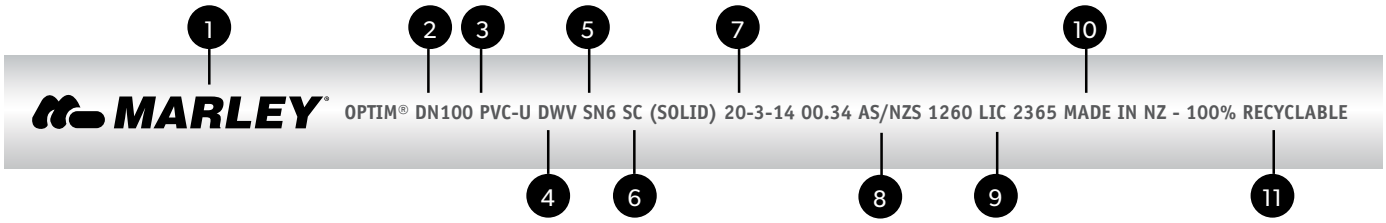

1. Manufacturers name or Trademark
2. Designated size of the pipe (Diameter Nominal)
3. Material
4. Drain, Waste and Vent applications
5. Stiffness class
6. SC (Solid)
7. Date of manufacture (year/month/day/time)
8. Manufacturing standard
9. External certification licence number
10. Country of manufacture
11. Recyclability

3. Jointing Methods

3.1 Solvent Joint

Marley Gold Solvent Cement is designed for solvent welding uPVC joints. It is not an adhesive. It is a blend of three aggressive solvents and sufficient resin to provide a brushing consistency.

When applied to the pipe or socket surface the Marley Gold and Marley uPVC Joint Primer cause the PVC to soften and swell. When two such surfaces are placed in close contact, (as in a spigot and socket joint) the softened surfaces mix and upon hardening produce a chemically welded joint. It is important that the spigot provides an interference fit in the socket. Do not attempt to make a joint that does not achieve an interference fit when dry. The actual area of contact between the spigot and the socket may only be a few millimetres.

Solvent welded joints are typically used in smaller diameter pipes, and to enable connection Marley supplies the following:



Marley Gold Solvent Cement: Manufactured to AS/NZS 3879 and used for both high and low pressure applications.



Marley uPVC Joint Primer: Manufactured to AS/NZS 3879 and used for all solvent jointed uPVC systems.

To make successful solvent weld joints, the following procedure is recommended for an easy, reliable and efficient assembly of solvent joints:

Safety precautions with solvent weld jointing

Ventilation

- Make sure there is adequate ventilation.
- Forced ventilation may be necessary inside buildings, in confined trenches and manholes.
- Keep the containers tightly sealed when not in use.

Flammability

- Solvent cement and priming fluids are highly flammable.
- Store them in a cool place away from heat, flames and sparks. Do not smoke while using them.
- Keep the containers tightly sealed when not in use.

Contact and Handling

Safety and First Aid instructions on the container should be followed.

- **Skin:** Solvent cement spilt onto skin should be washed off immediately with soap and water. Always wash hands thoroughly after use. The solvents attack the natural oils in human skin eventually causing serious dermatitis.
- **Eyes:** Should solvent cement affect the eyes, flush with cool clean water for at least 15 minutes.
- **Ingestion:** If solvent cement or primer is swallowed, induce vomiting.

Special considerations

When correct procedures and workmanship are carried out by appropriately trained personnel, durability including water tightness of the solvent joint can be assured.

Old or expired solvent should not be used

- Over time solvent can evaporate in the container and thicken to become jelly like. It will then be unable to chemically soften the joint surface adequately.
- Do not add thinners or solvents to Marley Gold, Marley Clear Solvent Cement or Marley Joint Primer.

Contamination will be detrimental to having a full-strength joint

- Do not use dirty or contaminated brushes or rags.
- Contamination such as oil, grease, water, dust or similar on the PVC surface prevents effective contact between the surfaces.

Solvent jointing should be performed only in dry conditions where the temperature is above 5°C. To ensure the integrity and longevity of the system, it is important to minimise the number of joints used. Additionally, no deflections or strain should be introduced on the fittings or joints, as this can compromise their effectiveness. For a proper seal, the spigot end must be cut square to ensure a good, secure joint.

How to Solvent Joint

General

- Before proceeding, make sure that the spigots and sockets are not cracked or damaged during transit.
- Only use a fine-tooth hack saw when cutting to length is necessary. Ensure the spigot is cut square, taking care not to chip or crack the pipe.
- Remove all burs from the inside bore and cut a 15° chamfer to the outside diameter to remove any external burrs.

1



Mark and chamfer

Mark the insertion depth on the spigot end. The insertion depth is equivalent to the depth of the corresponding joint socket. Use a soft pencil or felt pen which does not damage the cable duct.

Make a 15° chamfer to the external end of the spigot to remove any other burrs. Typically required on larger sized pipes.

2

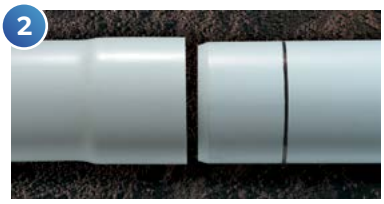

Clean

Clean, dry degrease the socket and spigot. Wipe with a clean cloth in methylated spirits.

Oil, grease, water or dust on the PVC surface prevents the softening.

3



Check the Fit

Dry assemble all intended joins.

Check that all joints have a full interference fit. Interference fit means that the spigot should not be able to fully penetrate the socket up to the insertion mark without force.

4



Applying Marley Joint Primer

Apply an even coat of priming fluid to the socket and then the spigot.

Note: Marley Gold should be applied before Marley Joint Primer dries off.

5



Apply Marley Gold

Apply an even coat of Marley Gold to the socket then the spigot to the insertion mark.

As a guide, the brush should be approximately one third to half the diameter of the pipe and should be large enough to apply the solvent cement in about thirty seconds.

6



Join

Insert the spigot to the full marked depth in the socket and HOLD for a minimum of 30 seconds, depending on temperature.

Pipes 100 DN or larger may need mechanical assistance to insert and hold the joint as the solvent bonds.

7



Clean Off

Remove any excess of Marley Gold.

Handling and Testing

- Do not flex or disturb the joint for a further 15 minutes and handle with extreme care for at least another hour.
- Do not pressure test for 24 hours, to allow the solvent cement to dry. This will make sure the joint is as strong as the rest of the pipe.

The approximate number of joints that may be joined with one litre is as follows:

Nominal Size DN	Marley Joint Primer	Marley Gold
15		600
20		350
25		260
32		190
40	500	140
50	300	85
65	250	70
80	200	60
100	100	50
125	90	40
150		30
200		25
225		15
300		10
300		10

3.2 Rubber Ring Joint

How to make a rubber ring joint



Check spigot end

Ensure pipe end has full 15° chamfer around circumference and insertion depth mark.

This should be 10 – 15mm less than the socket depth.



Clean socket and rubber ring

Clean socket and ring groove of dirt and loose gravel.

Clean rubber ring.



Fit rubber ring

Place rubber ring in groove correct way around and check for proper seating.

Fin must point into pipe for Z ring.



Align pipes

Align pipes horizontally and vertically.

Do not try to insert pipe at an angle to socket.



Lubricate spigot

Clean off dust and dirt. Apply Joint Lube Medlube to chamfer. Do not lubricate the ring groove.

Keep end free from dirt.



Insert pipe

Insert spigot into socket up to the insertion mark.

Do not use undue force. If force is required, check ring seating, using a torch to look up pipe.

Marley recommends the following Joint Lubricant



Joint Lube Medlube: Supplied as a pot or tube. Used in rubber ring jointing or encapsulated rubber ring.

3.3 Encapsulated Rubber Ring Joint

The Encapsulated Rubber Ring Joint has been fitted at the factory and no attempt should be made to remove the seal. Attempted removal will result in damage to the seal and possible leakage.

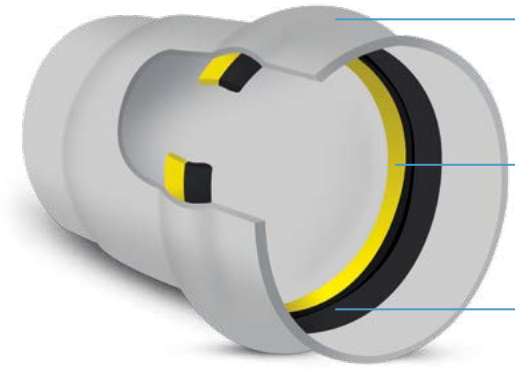

Integrated socket

- Fast Installation
- Seal locked into the socket at time of manufacture

Reinforced polypropylene

- Bonded to rubber seal
- Holds seal firmly in place

Flexible rubber seal

- Seals tightly against spigot and socket
- Ring Seal tested to AS/NZS 1260



Check Spigot

Ensure the pipe spigot has a full 15° chamfer. If cutting the pipe, make sure you remove any burrs.

Check that there is an insertion depth mark, then remove any dirt and dust as far back as the mark.



Clean Ring in Socket

Clean the ring and socket to remove any grit or dirt, ensure there is no grit or dirt under the seal lip.

Apply Joint Lube Medlube to the seal.

Note: Do not attempt to remove the seal



Align and Lubricate Pipes

Align pipes horizontally and vertically. Do not try to insert pipe at an angle to the socket. Lubricate spigot evenly with Joint Lube Medlube.



Insert Pipe

Insert spigot into the socket to the insertion depth mark, compressing the seal until the joint is fully made. Check the insertion depth mark to ensure over insertion hasn't occurred. The pipe should not bottom out in the socket to allow for expansion. If a reference mark is present, then the distance between the two marks should be 50mm.

Cautionary notes:

- If pipe deflection is required, this should only be attempted after a joint has been made.
- If machinery such as an excavator is used to insert a spigot into a socket this must be at the installers risk, extreme caution is advised.

4. Installation Sanitary Plumbing

4.1 Wastes and Vents above ground

It refers to pipes above ground floor slabs, including waste pipes from fixtures into a floor waste gully. A plumbing system designed in accordance with AS/NZS 3500.2 utilises appropriately sized pipes and fixture traps and offers architects, engineers and installers considerably more flexibility in design options.

- Fixtures can more easily be sited internally up to 10m unvented, via a sealed Overflow Relief Gully, (ORG) from the main drain to the seal of the fixture trap
- The number of vents required is reduced
- Floor drains can be used as shower wastes
- Under slab drainage installation is provided without the need for ducting of pipes
- The size of terminal vents is reduced
- External gully traps are minimised
- The number of access junctions required is reduced
- The number of fixture traps can be reduced
- The risk of surface stormwater invasion of sewer systems and the likelihood of misconnections are minimised

4.2 Floor Waste Gully (FWG)

Floor waste gullies are centrally located internal drains for approved waste discharge fixtures located within the same room as the FWG.

FWGs are classified as fixture traps under AS/NZS 3500.2. Consequently, this standard should be consulted to determine the approved fixtures and fixture pairs permitted to connect to FWGs.

Refer to the current standard for details of these fixture restrictions.

The maximum length of discharge pipes to a floor waste gully are based on whether the fixture is trapped or not, unvented should be no more than 1.2m and vented should be no more than 2.5m developed length. The only variation on this is a Tundish which has a maximum length of 10m in either trapped or untrapped.

Typical Wet Area Layout

Individual Fixture Waste Pipes

Diameter – DN40 min
Developed length of waste pipe after trap 2.5m

Note: Kitchen waste must not be connected to a floor waste gully

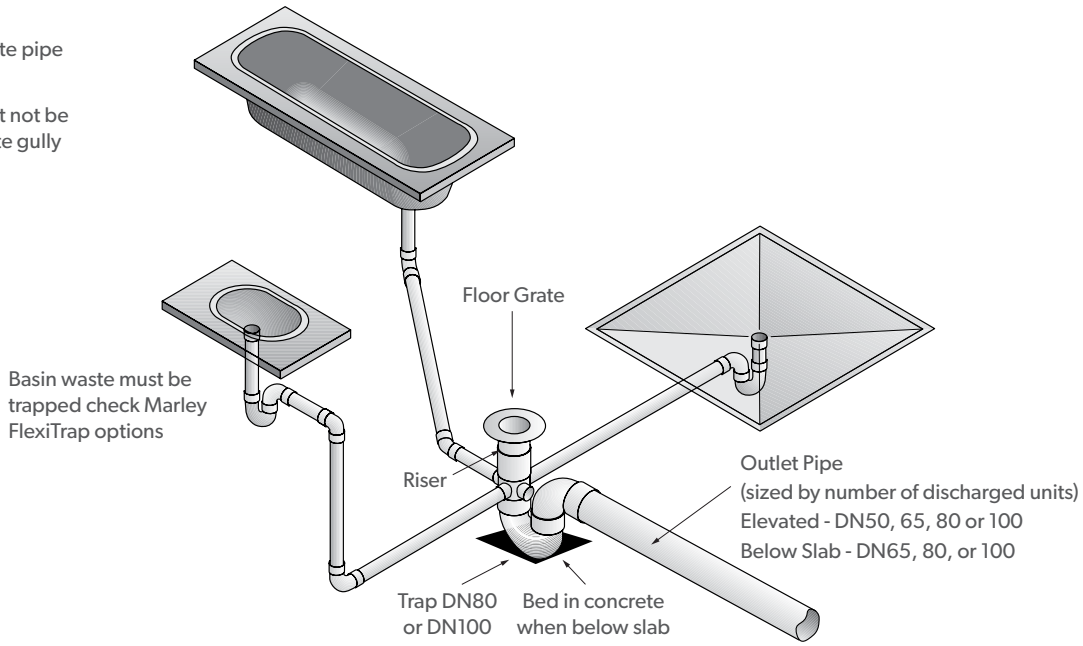

Marley have two variations of Floor Waste Gullies:

Compakt Boss Gully Trap – this low level FWG with a body length of 199mm is suited to reduced joist depths, the Compakt is currently only available with the following outlet and inlet sizes. It also includes a removable siphon insert.

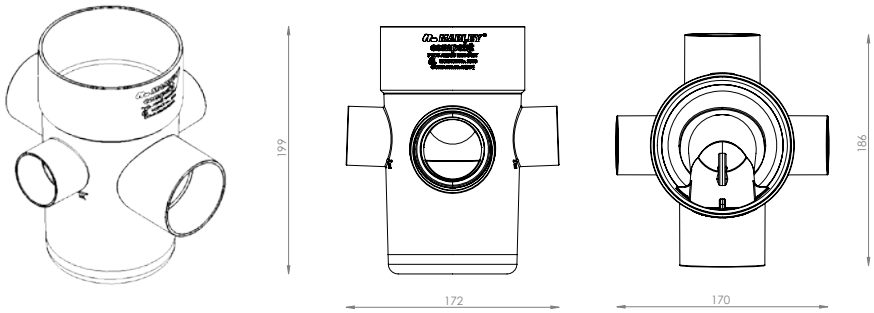

Code	Floor Inlet	Outlet	Inlet	Inlet
COMP.100.50.40	100mm (Female)	65mm (Male)	50mm (Female)	2 x 40mm (Female)
COMP.INSERT	Spare Insert complete			

*When connecting to a Robinhood STSLIMTAPKOHC, we recommend modifying the strainer to reduce the open area.

4 Way Boss Junction M&F – used in conjunction with the **Adjustable Floor Waste Gully** is a traditional FWG used where space is not constrained. Both components are available in various sizes to suit multiple installation requirements:

4 Way Boss Junction M&F

Code	Inlet	Boss Dimensions
170.80.50.40.88	80 M&F	50 x 40 x 40 x 40
170.100.50.40.88	100 M&F	50 x 50 x 40 x 40

Adjustable Floor Waste Gully

Code	Dimensions
159.80.50P	80 x 50DN
159.80.65P	80 x 65DN
159.100.50P	100 x 50DN
159.100.65P	100 x 65DN
159.100.100P	100 x 100DN

Additional components such as floor grates for various applications are available, refer to Marley NZ Product Catalogue for full range.

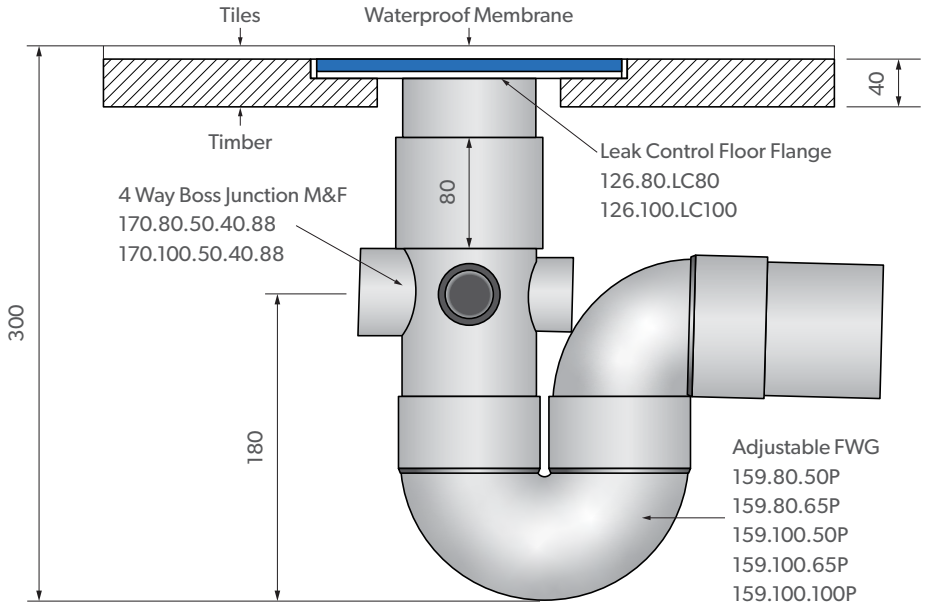

4.3 Gully Traps

Gully traps are designed to ensure that no surface water or foreign bodies are likely to cause a blockage. The top must be at least 25mm above the paved surround area or 100mm above the area if it is undeveloped. Discharging waste pipes through the back of a gully dish is not acceptable.

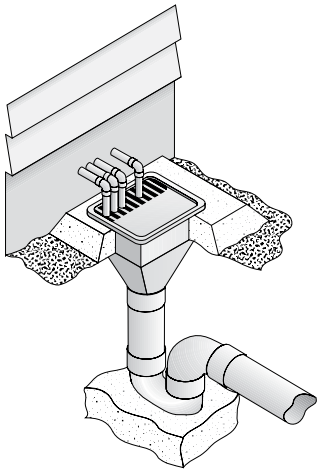

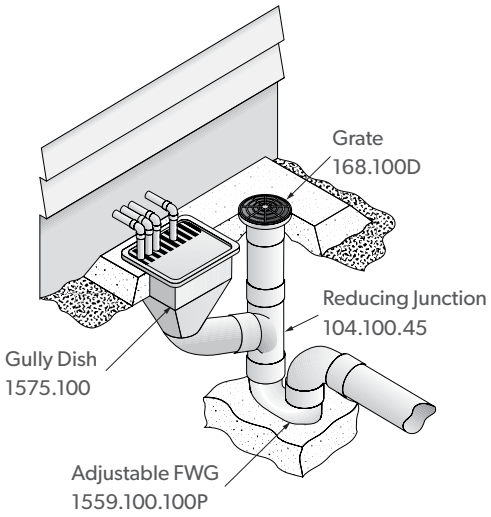

4.4 Overflow Gully and Overflow Relief

The prime purpose of the Overflow Relief Gully is to protect the household from backflow or surcharge rising from the sewer. The Overflow Relief Gully provides a relief point that allows any backflow to safely flow away from the household. To prevent blockages the Overflow Relief Gully must have a pop-out grate. Where a sealed outlet is required a secondary overflow outlet must be installed.

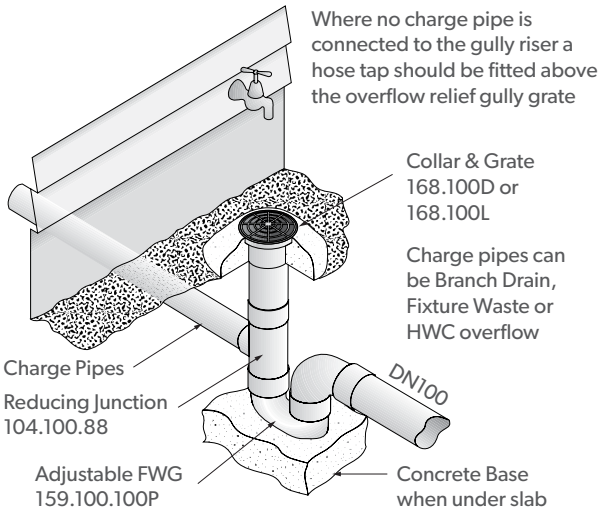

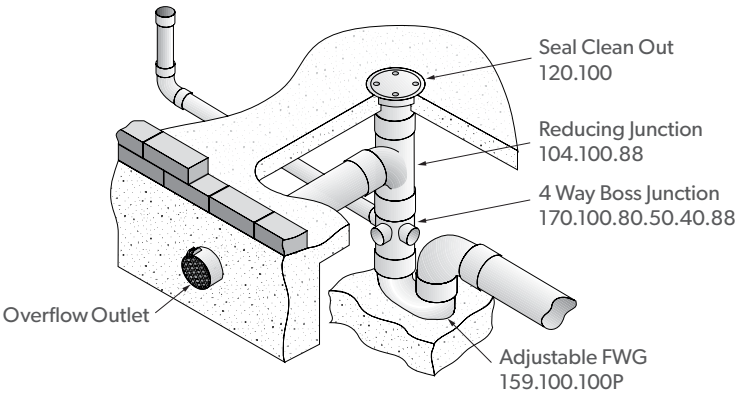

4.5 Basins

AS/NZS 3500.2 specifies that the minimum size of trap outlet and discharge pipe should be DN32 (applicable in NZ only).

Wash basins must be trapped and can be installed as a fixture pair with one wastewater trap as long as they have similar spill levels. Basins can discharge to a floor waste gully or connected to a drain or stack.

4.6 Baths, Showers and Washing Machines

DN40 or DN50 pipes can be run from these fixtures either directly to a main drain, to a stack or into a floor waste gully into a minimum DN65 diameter branch drainage pipe, directly to the main house drain or to an Overflow Relief Gully.

Where a bath trap is not accessible for maintenance the bath can be connected directly to a FWG untrapped. The length of the discharge pipe untrapped from a bath to a FWG using DN40 pipe should be no more than 1.2m.

Note: where excessive foaming is likely to occur, a washing machine discharge pipe should be connected directly into either a branch or main drain.

4.7 Kitchen Sinks

AS/NZS 3500.2 requires that all kitchen sinks must be connected to a fixture trap, DN40 waste pipes are acceptable in New Zealand only. The Fixture trap can be used as a fixture pair connected directly to a stack, sanitary drain or Overflow Relief Gully.

Triple bowl domestic sinks shall be connected in the following configurations:

a. As three single bowls with individual fixture traps
b. As a fixture pair and one single bowl with a dedicated fixture trap; or
c. Through a single fixture trap, provided the developed length of the discharge pipe between the sink outlets and the fixture trap seal is not greater than 1.2m

4.8 Laundry Tubs

Laundry tub waste may be run in either DN40 or DN50 into its own FWG or preferably it can be run directly into the main house drain, (due to the possibility of excessive foaming) via a larger branch drain, or through an Overflow Relief Gully.

4.9 Bends in Fixture Discharge Pipes

Fixtures other than basins or bidets shall have no more than 2 bends on a horizontal plane and 3 bends on a vertical plane.

Basins and Bidets are restricted to two bends for both horizontal and vertical planes.

4.10 Waste Pipe Discharge

Fixtures on either the upper floor or on the ground floor can be connected to the house drain system via individual waste pipes to an external gully. Waste pipes running to an external gully must be run above the slab level to maintain correct drainage.

The minimum grades of discharge pipes should be:

- 2.5%, (1 in 40) for DN40, DN50, DN65
- 1.65%, (1 in 60) for DN80, DN100
- 1.25%, (1 in 80) for DN125
- 1%, (1 in 100) for DN150
- 0.65%, (1 in 150) for DN225
- 0.4%, (1 in 250) for DN300

4.11 50mm Vertical Section of a Soil & Waste Stack

A maximum of three waste fixtures can be connected to the top of a DN50 stack provided the stack does not exceed three floors and a maximum of 30 fixture load units.

4.12 Waste Stack DN65

DN65 Waste Stacks can receive the discharge from kitchen sinks and laundry tubs provided the stack does not exceed two floors and no more than 2 kitchen sinks, or 1 kitchen sink plus 1 laundry tub are connected separately at each floor.

4.13 Single Stack Systems

Single Stack Systems should not normally be less than DN100, but allowable variances can be used as described in AS/NZS 3500.2. Incoming connections from fixtures can be connected directly or through a Floor Waste Gully.

Single Stack systems must be able to allow fixtures to be connected without the need for individual integrated trap/vent combinations or venting of a common discharge pipe.

Example of Single Stack System for Residential Buildings

Ba = Basin
Bth = Bath
FWG = Floor Waste Gully
Si = Sink
Shr = Shower
Tr = Trough
WC = Water Closet

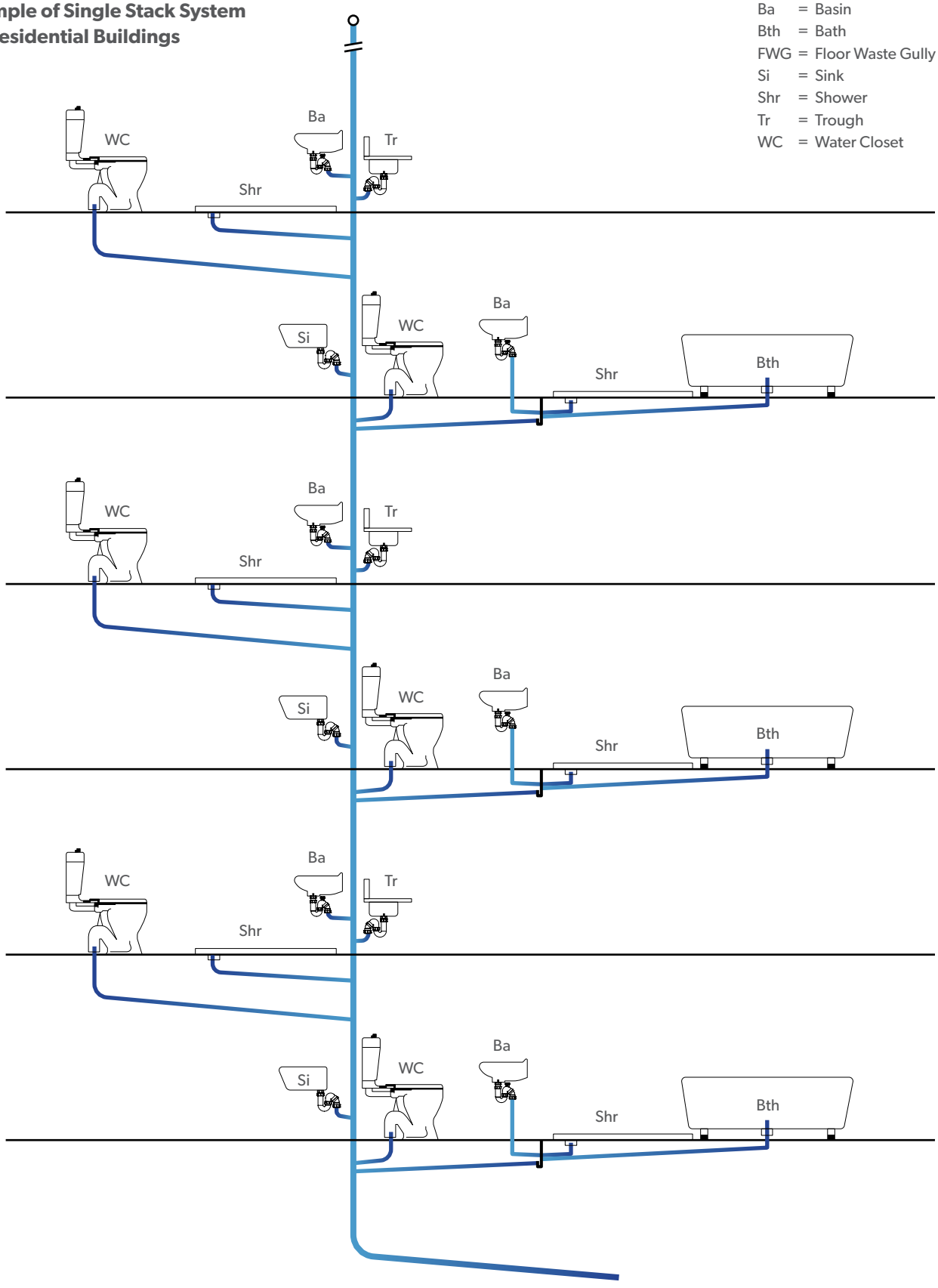

4.14 Single Stack Modified System

A single stack modified system incorporates a relief vent and cross vents which allows for higher discharge loading or additional floor levels. Pressure attenuators can also be used as an alternative to relief venting but cannot be used where they may receive a continuous flow as this may impede the attenuators normal operation. Review AS/NZS 3500.2 Clause 6.11 for full details.

Example of Single Stack Modified System for Domestic or Residential Buildings

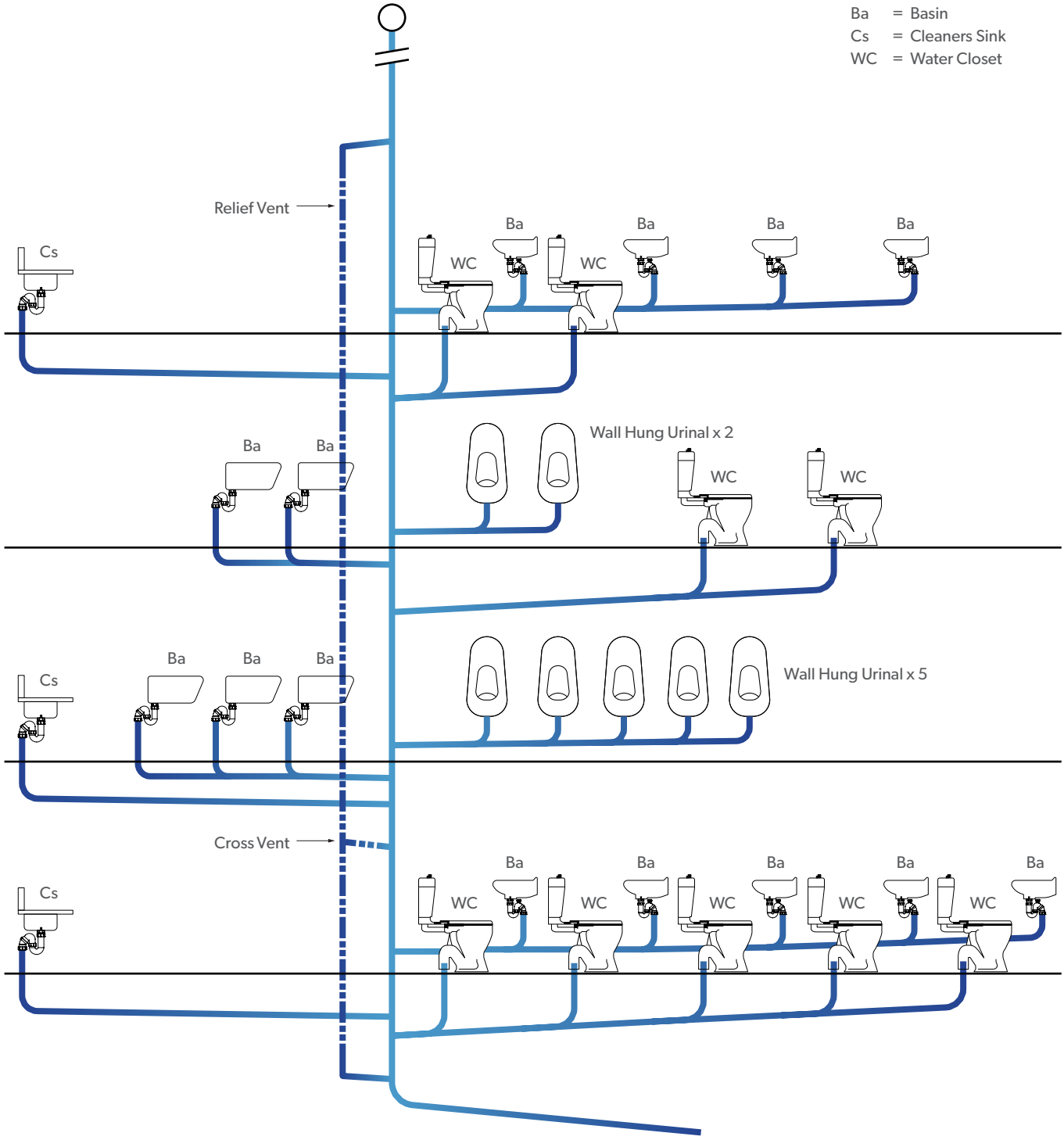

4.15 Converge – Reduced Velocity Aerator Stack System, (RVASS)

An RVASS is a sanitary drainage stack system that uses aerator fittings such as the Converge at each floor level to connect branch lines to a vertical building stack. The Converge reduces the velocity of the falling effluent and facilitates a smooth convergence of graded horizontal flow into the stack.

The vent opening between the offset chamber and the entry chamber keeps the horizontal pipe ventilated. This maintains a core of air inside the stack keeping the positive and negative pressures within limits to prevent trap seal breach without the requirement of an additional vent pipe.

By using Converge, a secondary stack isn't required which saves space, labour, and materials.

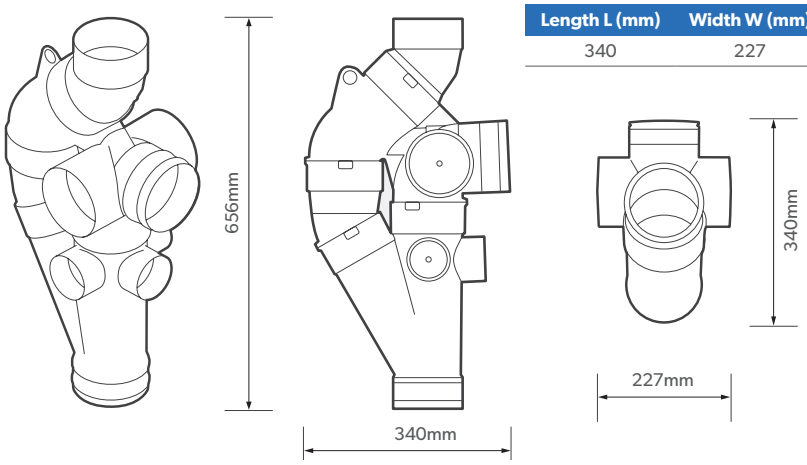

Length L (mm)	Width W (mm)	Height H (mm)
340	227	656

Required Converge Components for Installation	
CONV.100.PVC	Converge uPVC Aerator 100DN
111.100JL	100 DWV Access Fitting & Expansion Joiner
100SN6.100.6	OPTIM SN6 Pipe 100DN 6m

When installing the Converge an expansion/inspection fitting on every level is mandatory to absorb any pipe expansion and have a tension-free stack-aerator. It is recommended that openings are provided on each floor for maintenance purposes.

The access and expansion/inspection (111.100JL) should be installed just above the finished slab level.

It is a requirement that a double inline offset is required where the distance between two aerator units or an aerator and a de-aerator exceeds 5m.

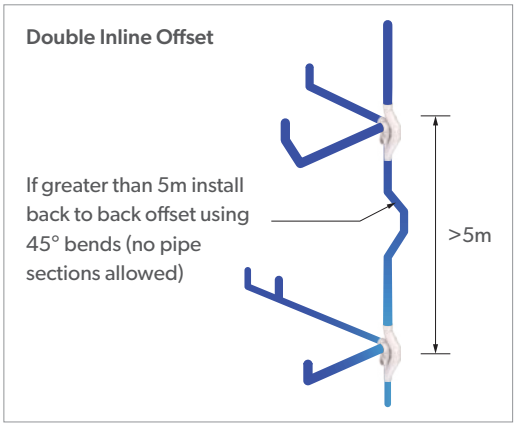

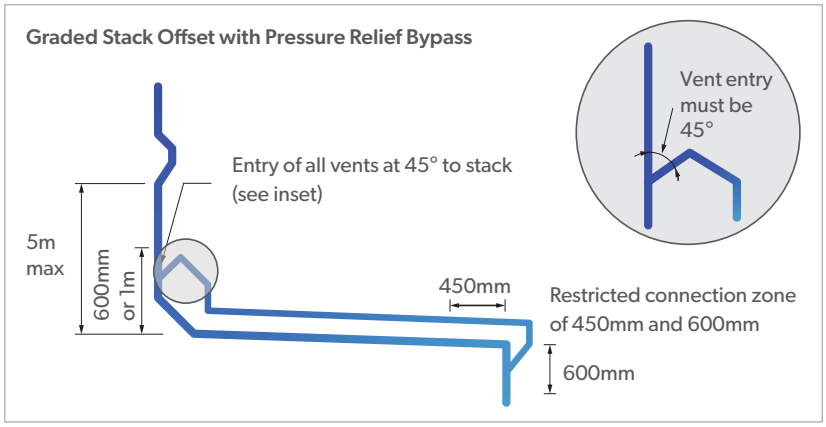

For more information about Converge, visit our website (www.marley.co.nz) and/or AS/NZS 3500.2 Section 11.

4.16 Concrete Slab

- **Below:** Firm bedding in clean sand using sleeving and/or dry packing where pipes penetrate the slab or install a larger outer ducting to carry the service pipe.
- **In:** Install a larger duct to carry the service pipe or wrap the pipe in polyethylene, felt, Denso tape or foam membrane.
- **Under:** Any pipe running under a concrete slab from a fixture directly to the main house drain is deemed to be a drain. As such it must be at least DN65 and connected as if a drain.

Other important points to remember in connection with installations in or under concrete slabs:

- Any waste pipe running to an external gully trap must run above the slab for its entire length, or considered a drain if dropped below slab level.
- Individual waste pipes running under a concrete slab from a fixture to an FWG are simply considered an extension of the floor above waste pipe and may be treated as such.
- All pipes in or below concrete should be installed in straight runs.
- Expansion and contraction of PVC drains must be catered for when installing in concrete.

4.17 uPVC Pipe Supports

Pipe supports are designed for two functions, to clamp a fitting which will create a fixed point, and to give support to a length of pipe while allowing thermal movement. For pipe supports there is a difference between vertical and horizontal spacings between the NZBC and AS/NZS 3500.2, for the Plumber/Drainlayer Marley would suggest using the NZBC G13/AS1 detail as the dominant local code. For reference, the details of both codes are shown below:

Maximum Distance Between Supports NZBC G13/AS1			Maximum Distance Between Supports AS/NZS 3500.2 Cl. 10		
Pipe DN	**Vertical (m)**	**Graded Pipes (m)**	**Pipe DN**	**Vertical (m)**	**Graded Pipes (m)**
DN 32 – 50	1.0	0.5	DN 40 – 50	2.0	1.0
DN65 – 100	1.2	1.0	DN65 – 150	2.5	1.2
> DN100	1.8	1.2	>DN150	3.0	1.5

Pipe Support Requirements and Restrictions

- Shall be connected to the building structure
- Shall be designed to withstand loads applied
- If metallic must be protected against corrosion
- Shall be compatible materials
- Fixed points must be clamped securely, unless thermal movement has been allowed for
- Shall restrain the pipe from being able to move in a lateral direction
- Joints are subjected to minimal loads only
- Do not braze or weld sections of any material to the pipe surface and do not clamp, braze or weld to adjacent pipes
- Do not connect uPVC pipe brackets, clips or hangars to stainless steel pipes

4.18 Socket Direction

The direction of the bell end significantly affects pipe assembly. PVC pipe joints are designed so that the male spigot end is inserted into the female bell end. In other words, as the installation progresses, the bell end should always remain visible at the trailing end of the pipe.

There are two reasons:

- **Leak Prevention:** Pushing the larger bell end onto the smaller spigot increases the risk of scooping soil into the joint, which can compromise the seal and lead to leaks.
- **Ease of Assembly:** Proper alignment is easier to achieve when inserting the smaller spigot into the larger bell. This reduces the force required and ensures a more secure connection.

Reference PVC Pipe Association Technical Brief 11.23.2016 - "Flow Characteristics of PVC Sewer Pipe," Neale, L. and Price, R. (1964); Handbook of PVC Pipe, Uni-Bell (2013); Tech Brief: "Expansion Gaps for Gasketed PVC Pipe: Maximizing Joint Performance," Uni-Bell (2013); Tech Brief: "Gasketed PVC Pipe: The Importance of Insertion Lines," Uni-Bell (2013).

5. Installation Drainage

5.1 Inspection Openings

Marley OPTIM inspection openings are available in both Solvent Joint and Rubber Ring Joint and are to be installed at:

- Not more than 30m intervals where soil fixtures are connected
- Outside the building on branches connecting one or more water closets, but no greater than 2.5m away from the building
- On the downstream end where any drain passes under a building, except where waste fixtures only are connected
- Where any new section of drain is connected to any existing drain

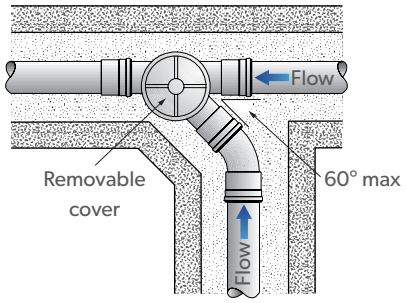

(a) Horizontal connection

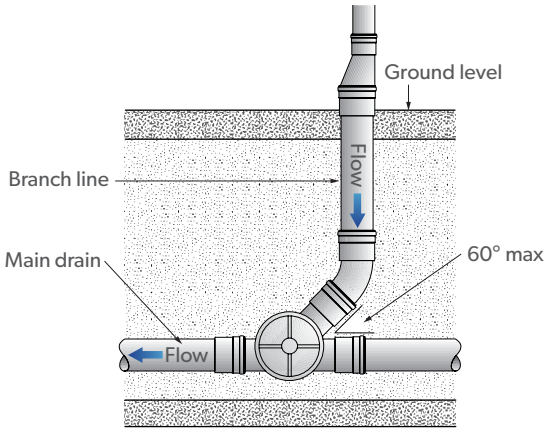

(b) Vertical connection

The following Inspection Fitting options are available in the OPTIM DN80 & DN100 range:

Fitting	Code	Size	Connection
Rear Access Bend	102.100.88	100 x 88°	SJ
Side Access Bend	103.100.45S 103.100.88S	100 x 45° 100 x 88°	SJ SJ
Rear Access Junction	105.80.88 105.100.88	80 x 88° 100 x 88°	SJ SJ
Side Access Junction	105.100.45LH 105.100.45RH	100 x 45° 100 x 45°	SJ SJ
Combo Inspection Tee/Expansion Coupler	111.100JL*	100DN	SJ
Inspection Pipe M&F	129.100S 129.100	100DN 100DN (F+F)	SJ SJ
Side Access Bend	1503.100.45 1503.100.88	100 x 45° 100 x 88°	RRJ RRJ
Side Access Junction	1505.100.45LH 1505.100.45RH	100 x 45° 100 x 45°	RRJ RRJ
Access Pipe	1529.100	100DN	RRJ

* Product has removable cardboard spacer

5.2 Bends

Pipe layouts should be planned to reduce the risk of blockages

- Use the least number of bends
- Use the maximum bending radius in all bends installed to minimise blockage potential
- Lay pipes in straight lengths between bends both horizontally and vertically

5.3 Junctions

Any connection must be made by means of a swept inspection junction or Marley Lunden junction on a main line. The angle that the branch makes with the main drain shall not be greater than 60°.

The junctions in the OPTIM range include: Plain junction, reducing junction, rear inspection junction, slide access junction, double junction, reducing junction M&F, 4 way boss junction M&F, plain junction spigot end, reducing junction spigot end, plain junction F&F.

5.4 Gradient – Number of Discharge Units

For sanitary drains the gradient of a discharge pipe affects the discharge unit loading available, for instance a 100mm discharge pipe can be set to 1:60 and will have a unit loading of 115, change the gradient to 1:20 and you could have up to 376.

Review G13/AS1 4.4 Gradient – Table 4 for details regarding unit loadings at various diameters and gradients.

5.5 Excavation

The recommended trench depth should be determined by the proposed surface-imposed loading plus the soil loading based on the depth. The depth should be sufficient to ensure there is no damage to the pipe during its intended service life.

Trench support requirements must be observed. WorkSafe have standard guidelines for installers, safety and these should always be complied with.

When shoring or stepping is used care needs to be taken that no voids are left as the shoring is removed and the compaction density of the backfill is achieved.

5.6 Trench Width

Trench width should be as narrow as practical, leaving enough space each side of the pipe to be laid to allow for compaction. Narrower trenches result in less disruption to local services and achieve faster excavations and minimise loads imposed on the pipe.

The minimum trench width at the base should be the diameter of the installed pipe plus 200mm and should be no more than 600mm at the top of the pipe unless the trench is to be covered with concrete.

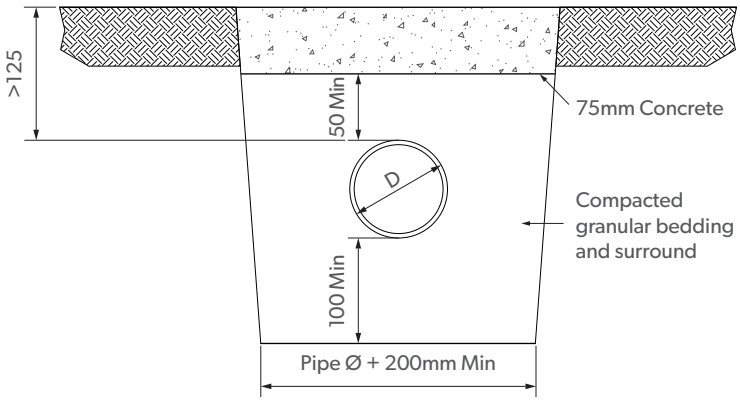

Cover greater than 125mm

5.7 Pipe Laying

Prior to pipe installation inspect the pipe to ensure the bore is free from foreign matter and that the pipe outside diameter as well as the socket have not been damaged. If the pipe has a Rubber Ring Joint, ensure that it is clean and lubricated prior to inserting the incoming male spigot into the bell end.

Pipes should be laid in straight lengths between bends or junctions both horizontally and vertically.

5.8 Pipe Bed Preparation

The pipe bed should give firm, even support and should be excavated 100mm minimum below the invert of the pipe to allow the bedding material to be placed.

Where the natural ground provides inadequate support for the foundation the trench should be over excavated and selected hardfill compacted in place to provide adequate support. Compact hardfill should be used to make up for any over exaction needed.

A groove should be excavated under the bell end socket of the pipe to allow the pipe length to sit on the foundation and be uniformly supported.

5.10 Bedding

The pipe bedding material should be non-cohesive, (free running), granular, crushed rock, free from sharp stones and as per G13/AS2 no larger than 20mm.

The material excavated from the trench may be reused so long as it is dry and meets the above requirements. If bedding with sand take special precautions to ensure this does not get washed into a Rubber Ring Joint.

5.11 Side Support and Backfill

Bedding material should be used for side support and should be tamped down each side of the pipe to a minimum height of 150mm above the crown of the pipe. Particular care should be taken not to leave any voids or disturb the line or gradient of the pipe as well as ensuring the pipe remains undamaged.

Special care should be taken with larger diameter pipes to ensure the side support is adequately compacted to minimise pipe ovality when the backfill is compacted to the density required.

When the pipe has passed the required testing and the pipe and fittings are covered and tamped with appropriate side fill, backfilling with excavated or imported material, (dependent on loading requirements) can proceed.

No mechanical compaction should start until at least 300mm of backfill has been placed over the side fill.

5.12 Pipe Cover

Trenches must be excavated to a depth to allow for the appropriate bedding depth to be achieved so that the nominal pipe diameter and sufficient cover meet the performance requirements expected.

Shallow trench configuration

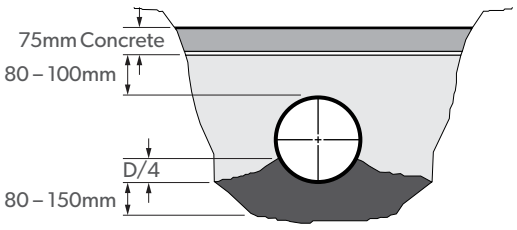

Wide trench configuration

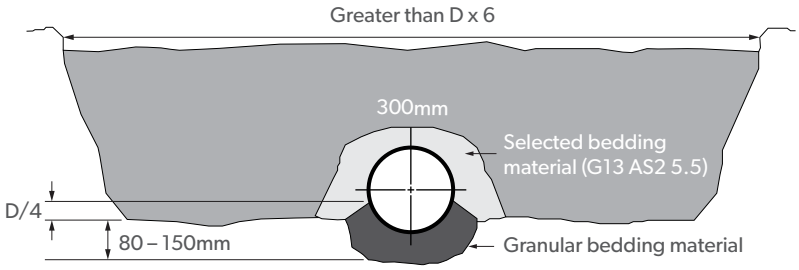

Minimum Cover

Location	Depth of cover (mm)
Not subject to vehicular loading	300
Vehicular traffic	
• Not on roadways	450
• Sealed roadways	600
• Under sealed roadways	750
Pipes in embankment conditions or subject to construction equipment loading	750

Trench in poor foundation situation

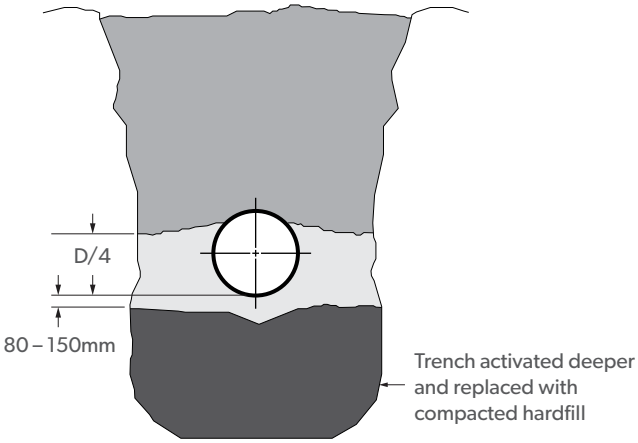

5.13 Anchoring on Steep Slopes

When pipes are installed on steep slopes, issues may arise – particularly on gradients steeper than 1:5 (20%).

- Pipes can slide downhill during construction or after installation, possibly causing disengagement of the spigot and socket. To avoid this, each pipe should be firmly anchored with special bedding, or haunching with concrete fastenings.
- Special care needs to be taken on all steep installations as bedding back filling can be scoured out. Clay, concrete or sandbag stops should be placed at appropriate intervals above and below the pipe to stop the erosion of the backfill. Lime or cement stabilised backfilling material may be used.

Anchor Spacing	
Gradient	Spacing (m)
1: 2 (50%)	5.5
1:4 (25%)	11
1:6 (16.67%)	22

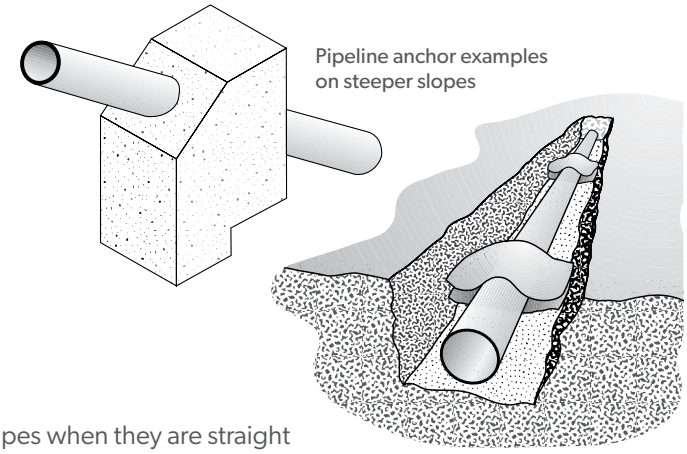

Pipeline anchor examples on steeper slopes

5.14 Pipe Bending Radius

Before attempting to induce any curvature, always joint two pipes when they are straight to avoid dislodging the rubber ring. Rubber ring joints can be deflected up to 3%.
Greater changes in direction can be achieved using shorter pipe lengths or formed swept bends.

For smaller pipe sizes, uPVC is flexible enough to be subjected to limited bending, the curvature should be induced over the full length of the pipe. Joints should be well anchored to ensure the joint is not deflected more than 3%.
The minimum bend radius for uPVC shown below should not be exceeded:

- Non-Pressure Pipe = 150 x DN
- Pressure Pipe = 300 x DN

5.15 Jointing into a Concrete Manhole

In order to relieve stress caused by differential settlement between heavy concrete structures and a uPVC drain, Rocker pipes or shorts should be used.

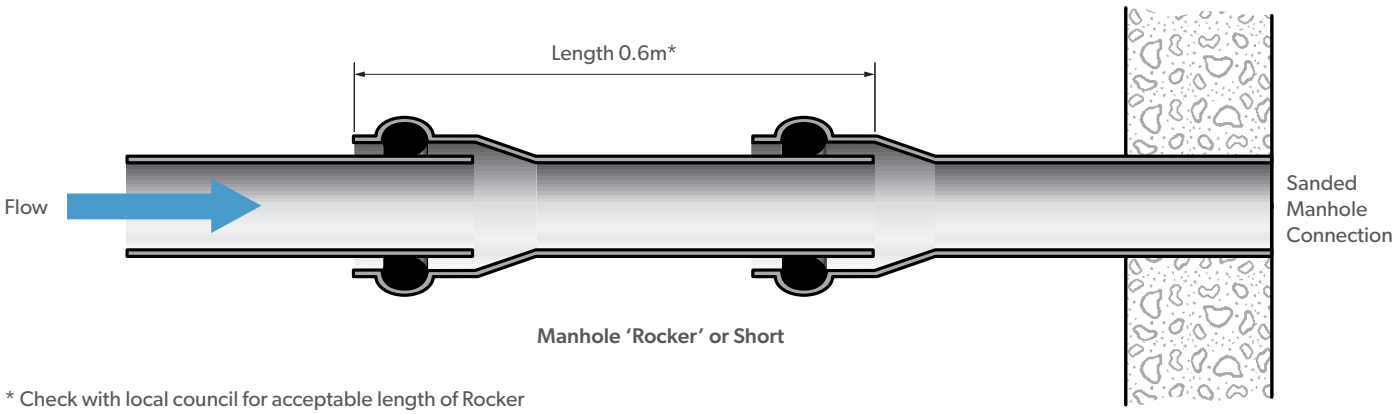

Manhole 'Rocker' or Short

* Check with local council for acceptable length of Rocker

Always check with your local council for approved methods before installation as allowable lengths may differ.

6. Testing and Commissioning Non-Pressure Pipelines

The NZBC G13/AS1, (above ground) and G13/AS2, (all sections of the drainage system) requires all pipe systems to be tested for water tightness irrespective of whether rubber ring joints or solvent cement joints are used. This clause references AS/NZS 2032 Section 7 as an acceptable solution for both pressure and non-pressure systems.

6.1 Hydrostatic Test

Fill the pipeline to a level of not less than 1m above the natural ground level at the highest point of the pipeline being tested, or to the flood level of the lowest sanitary fixture.

The test should run for at least 15 minutes without leaking, if leaks are found repairs should be completed and the test restarted.

Note: Do not test if ground water is above the pipeline. Where groundwater is not above the pipeline the test pressure should be increased 10kPa for every metre depth of groundwater.

6.2 Low Pressure Air Test

An air pressure of 50kPa should be held for at least 3 minutes, if there are no leaks close the incoming pressure supply and wait a further 60 seconds. The pressure should not drop below 35kPa, if pressure is maintained the test is considered a pass. If the pressure drops below 35kPa open the pressure supply and inspect all joints and fittings to determine where a leak may be present. Drop the pressure and repair any identified leaks before restarting the test.

Note: Do not test if ground water is above the pipeline. Where groundwater is not above the pipeline the test pressure should be increased 10kPa for every metre depth of groundwater to a maximum of 60kPa.

6.3 Vacuum Testing

All inlets, outlets and other access points should be sealed and an initial negative pressure of approx. 27kPa introduced. The vacuum should then be closed, and the air pressure allowed to stabilise for at least 3 minutes. Recording of the test should be started once the pressure reaches 23.6kPa. The minimum test duration depends on the diameter of the pipe being tested and the length of the pipeline. AS/NZS 2032 Table 7.1 has full details relating to the required time in relation to length and diameter of the pipeline.

The test is considered a pass if the drop in vacuum is ⩽7kPa, if the vacuum loss is greater the pipeline should be repaired and the test restarted. If there are any visual or audible faults these must be repaired even if the test was successful.

7. Handling and Storage

When handling crates or individual pipe lengths all due care and attention should be given to handling the pipe and maintaining personal safety. For instance, a 6-metre length of DN100 SN8 pipe weighs approximately 10.32kg. With 60 lengths packed in a crate, the total weight – excluding the crate itself – comes to around 620kg.

7.1 Unloading and Handling

- When crates are delivered to a site the area needs to be accessible and free from obstructions with enough room to offload the crates safely. The delivery area should be stable and level.
- Deliveries of bulk quantities of pipe will be packed in timber framed crates; these deliveries should be offloaded mechanically as they are heavy and stored in the crates.
- If stacking multiple crates, they should be stacked wood on wood rather than onto the pipe so that the crates take the load.
- If a crate is damaged do not stack above the crate as they may collapse, rather set the damaged crate at ground level and offload pipe.
- Do not manhandle crates as they are being lifted, a rope or other device that keeps the user remote from the crate.
- No person should be under the load while lifting at all times during delivery.
- Use clear hand signals or communication devices to coordinate between the Hiab operator and ground personnel receiving the shipment.
- Bundles of pipes should be lifted with webbing or synthetic slings spread so that there is no more than 1m overhang, excessive overhang can cause bowing.
- When bundles of pipe are being carried together, they should be held securely so that they are not damaged due to rubbing or rolling around.
- Do not drop or drag uPVC pipes.

7.2 Stacking

The following stacking procedure is advised:

- The bottom layer should be laid on timber bearers at least 75mm wide and spaced no more than 2m apart, centre to centre. The weight should not be taken by the socket end of the bottom layer.
- Pipes should be stacked with sockets alternating end for end so that the sockets do not bear on each other.
- If the stack is more than two layers high, vertical side supports not more than 3m apart should be used.
- Pipe stacks should not be more than 1.5m high.
- When using pyramid stacking the maximum height should not exceed 1m and the bottom pipes should be chocked.
- Pipes should be stacked to prevent bowing or twisting of the pipe, regardless of the stacking method used.

7.3 Storage

- Pipes should not be stored in direct sunlight for more than 12 months.
- If storage extends beyond 12 months, pipes must be covered and protected from direct sunlight. Avoid using black plastic as a cover, as it can trap heat. Instead, use a cover that allows for adequate ventilation to prevent heat buildup, in accordance with AS/NZS 2032.
- When storing uPVC pipes with Rubber Ring Joints, make sure the seals are protected from sunlight and kept free from dirt or other foreign materials that could become trapped in the sealing area.

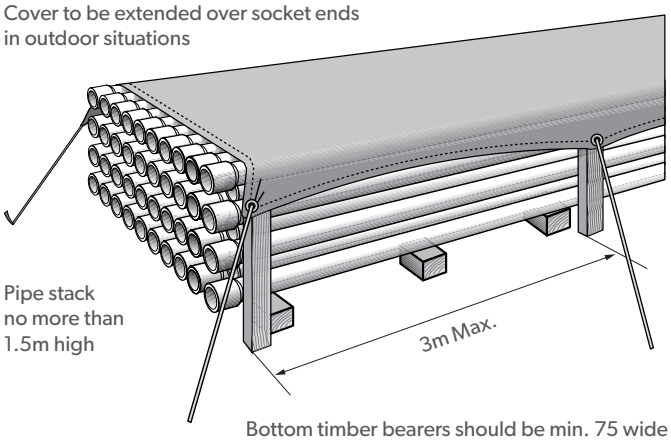

7.4 Stringing

Laying the pipes along the length of the trench is known as stringing, the following points should be observed:

- Sockets should face the direction in which work will be going.
- Pipes should be unloaded on the opposite side of the trench to the soil.
- Pipes should be placed at 6m intervals.
- Sockets should be placed so that the intended flow direction enters the socket end of the pipe.
- The identification print on the pipe should always be laid uppermost to aid identification of the pipe should it be uncovered at any time in the future.

8. OPTIM DWV Sanitary Systems Range



SJ
(Solvent Joint)



RJ
(Rubber Ring Joint)

Code	Description	Length	Crate Qty
OPTIM® Solid Wall Pipe: 100DN (SN6), 150-375DN (SN4)			**AS/NZS 1260 : 2017**
100.32.1	32DN DWV Pipe 1SJ	1m	230
100.32.3	32DN DWV Pipe 3SJ	3m	230
100.32.6	32DN DWV Pipe 6SJ	6m	230
100.40.1	40DN DWV Pipe 1SJ	1m	180
100.40.3	40DN DWV Pipe 3SJ	3m	180
100.40.6	40DN DWV Pipe 6SJ	6m	180
100.50.1	50DN DWV Pipe 1SJ	1m	149
100.50.3	50DN DWV Pipe 3SJ	3m	149
100.50.6	50DN DWV Pipe 6SJ	6m	149
100.65.1	65DN DWV Pipe 1SJ	1m	96
100.65.3	65DN DWV Pipe 3SJ	3m	96
100.65.6	65DN DWV Pipe 6SJ	6m	96
100.80.1	80DN DWV Pipe 1SJ	1m	66
100.80.4	80DN DWV Pipe 4SJ	4m	66
100.80.6	80DN DWV Pipe 6SJ	6m	66
100SN6.100.1	100DN DWV Pipe SN6 1SJ	1m	60
100SN6.100.3	100DN DWV Pipe SN6 3SJ	3m	60
100SN6.100.4	100DN DWV Pipe SN6 4SJ	4m	60
100SN6.100.4RJ	100DN DWV Pipe SN6 4RJ	4m	60
100SN6.100.6	100DN DWV Pipe SN6 6SJ	6m	60
100SN6.100.6RJ	100DN DWV Pipe SN6 6RJ	6m	60
100SN4.150.4RJ	150DN DWV Pipe SN4 4RJ	4m	28
100SN4.150.6	150DN DWV Pipe SN4 6SJ	6m	28
100SN4.150.6RJ	150DN DWV Pipe SN4 6RJ	6m	28
100SN4.175.6	175DN DWV Pipe SN4 6SJ	6m	10
100SN4.175.6RJ	175DN DWV Pipe SN4 6RJ	6m	10
100SN4.225.6RJ	225DN DWV Pipe SN4 6RJ	6m	8
100SN4.300.6RJ	300DN DWV Pipe SN4 6RJ	6m	6
100SN4.375.6RJ	375DN DWV Pipe SN4 6RJ	6m	6



SJ
(Solvent Joint)



RJ
(Rubber Ring Joint)

OPTIM® Solid Wall Pipe: 100DN (SN10), 150-475DN (SN8)			**AS/NZS 1260 : 2017**
100SN10.100.6	100DN DWV Pipe SN10 6SJ	6m	60
100SN10.100.6RJ	100DN DWV Pipe SN10 6RJ	6m	60
100SN8.150.6	150DN DWV Pipe SN8 6SJ	6m	28
100SN8.150.6RJ	150DN DWV Pipe SN8 6RJ	6m	28
100SN8.175.6	175DN DWV Pipe SN8 6SJ	6m	10
100SN8.175.6RJ	175DN DWV Pipe SN8 6RJ	6m	10
100SN8.225.6RJ	225DN DWV Pipe SN8 6RJ	6m	8
100SN8.300.6RJ	300DN DWV Pipe SN8 6RJ	6m	6
100SN8.375.4RJ	375DN DWV Pipe SN8 4RJ	4m	6
100SN8.375.6RJ	375DN DWV Pipe SN8 6RJ	6m	6
100SN8.475.4RJ*	475DN DWV Pipe SN8 4RJ	4m	6
100SN8.475.6RJ*	475DN DWV Pipe SN8 6RJ	6m	6

*Only available in the South Island. MOQ & leadtimes may apply. For further details, contact your TM or phone **0800MARLEY (0800 627 539)**
Note: Marley manufactures 6 metre OPTIM DWV pipes over 100DN at an effective length. All other lengths stated are an overall length.



SJ
(Solvent Joint)



RJ
(Rubber Ring Joint)

Code	Description	Length	Crate Qty
OPTIM® Solid Wall Pipe: 100-475DN (SN16)			**AS/NZS 1260 : 2017**
100SN16.100.6	100DN DWV Pipe SN16 6SJ	6m	60
100SN16.100.6RJ	100DN DWV Pipe SN16 6RJ	6m	60
100SN16.150.3RJ	150DN DWV Pipe SN16 3RJ	3m	28
100SN16.150.4RJ	150DN DWV Pipe SN16 4RJ	4m	28
100SN16.150.6	150DN DWV Pipe SN16 6SJ	6m	28
100SN16.150.6RJ	150DN DWV Pipe SN16 6RJ	6m	28
100SN16.175.6RJ	175DN DWV Pipe SN16 6RJ	6m	10
100SN16.225.3RJ	225DN DWV Pipe SN16 3RJ	3m	8
100SN16.225.4RJ	225DN DWV Pipe SN16 4RJ	4m	8
100SN16.225.6RJ	225DN DWV Pipe SN16 6RJ	6m	8
100SN16.300.3RJ	300DN DWV Pipe SN16 3RJ	3m	6
100SN16.300.4RJ	300DN DWV Pipe SN16 4RJ	4m	6
100SN16.300.6RJ	300DN DWV Pipe SN16 6RJ	6m	6
100SN16.375.3RJ	375DN DWV Pipe SN16 3RJ	3m	6
100SN16.375.4RJ	375DN DWV Pipe SN16 4RJ	4m	6
100SN16.375.6RJ	375DN DWV Pipe SN16 6RJ	6m	6
100SN16.475.3RJ*	475DN DWV Pipe SN16 3RJ	3m	6
100SN16.475.4RJ*	475DN DWV Pipe SN16 4RJ	4m	4
100SN16.475.6RJ*	475DN DWV Pipe SN16 6RJ	6m	6

*Only available in the South Island. MOQ & leadtimes may apply. For further details, contact your TM or phone **0800MARLEY (0800 627 539)**

OPTIM® Fittings - Solvent Joint 32DN > 150DN **AS/NZS 1260 : 2017**

Minimum Order: 10 Units (32, 40, 50, 65mm) / 5 Units (80, 100, 150mm)



Code	Size	Carton Qty
Plain Bend F&F		
101.32.45	32 x 45°	250
101.32.88	32 x 88°	400
101.40.15	40 x 15°	260
101.40.45	40 x 45°	200
101.40.60	40 x 60°	200
101.40.88	40 x 88°	250
101.50.15	50 x 15°	150
101.50.45	50 x 45°	100
101.50.88	50 x 88°	100
101.65.15	65 x 15°	90
101.65.45	65 x 45°	10
101.65.88	65 x 88°	10
101.80.45	80 x 45°	40
101.80.88	80 x 88°	35
101.100.5	100 x 5°	60
101.100.15	100 x 15°	27
101.100.30	100 x 30°	34
101.100.45	100 x 45°	30
101.100.60	100 x 60°	10
101.100.88	100 x 88°	15
101.150.45	150 x 45°	5
101.150.88	150 x 88°	5



Code	Size	Carton Qty
M&F SPIGOT BEND		
171.40.43	40 x 43°	240
171.40.88	40 x 88°	60
171.50.43	50 x 43°	100
171.50.88	50 x 88°	90
171.65.40	65 x 40°	75
171.80.45	80 x 45°	10
171.80.88	80 x 88°	30
171.100.5	100 x 5 °	27
171.100.11	100 x 11°	50
171.100.15	100 x 15°	25
171.100.22	100 x 22°	50
171.100.30	100 x 30°	25
171.100.43	100 x 43°	28
171.100.88	100 x 88°	15
171.50.40.45	REDUCING 50 x 40 x 45°	120

OPTIM® Fittings - Solvent Joint 32DN > 150DN — **AS/NZS 1260 : 2017**



Code	Size	Carton Qty
Rear Inspection Bend		
101.50.45W	50 x 45°	85
101.50.88W	50 x 88°	80
101.65.45W	65 x 45°	45
101.80.45W	80 x 45°	40
101.80.88W	80 x 88°	30



Rear Access Bend		
102.100.88	100 x 88°	15



Side Access Bend		
103.100.45S	100 x 45°	10
103.100.88S	100 x 88°	10



Plain Junction		
104.32.88	32 x 88°	200
104.40.45	40 x 45°	100
104.40.88	40 x 88°	100
104.50.45	50 x 45°	60
104.50.88	50 x 88°	80
104.65.45	65 x 45°	15
104.65.85	65 x 85°	40
104.80.45	80 x 45°	30
104.80.88	80 x 88°	30
104.100.45	100 x 45°	15
104.100.88	100 x 88°	15
104.150.45	150 x 45°	4
104.150.88	150 x 88°	3



Reducing Junction		
104.100.50.88	100 x 50 x 88°	22
104.100.50.45	100 x 50 x 45°	25
104.100.65.45	100 x 65 x 45°	20
104.100.80.45	100 x 80 x 45°	15
104.150.100.45F	150 x 100 x 45°	5
104.150.100.88F	150 x 100 x 88°	6



In Pipe & In Socket 90° Elbows		
191.40S	40mm in socket elbow*	200
191.40P	40mm in pipe elbow**	200
191.50S	50mm in socket elbow*	200
191.50P	50mm in pipe elbow**	200

Made from ABS material.
* One end fits inside pipe socket.
**One end fits inside pipe.



Code	Size	Carton Qty
Rear Inspection Junction		
104.50.88W	50 x 88°	100



Rear Access Junction		
105.80.88	80 x 88°	15
105.100.88	100 x 88°	12



Side Access Junction		
105.100.45LH	100 x 45°	10
105.100.45RH	100 x 45°	10



Double Junction		
106.100.88	EQUAL 100 x 88°	12



Ring Seal Adaptor		
109.80	80DN	100
109.100	100DN	100



Straight Coupler		
110.32	32DN	350
110.40	40DN	300
110.50	50DN	200
110.65	65DN	95
110.80	80DN	100
110.100	100DN	40
110.100T*	100DN	10
110.150*	150DN	18

*Coupler has external thread on one end.



Fixed Expansion Coupler		
111.50	50DN	110
111.65*	65DN	40
111.80	80DN	72
111.100	100DN	20
111.100C*	100DN	20

*Product has removable cardboard spacer.



Combo Inspection Tee/Expansion Coupler		
111.100JL*	100DN	7

*Product has removable cardboard spacer.



Female Thread Adaptor		
112.32	32DN	150
112.40	40DN	300
112.50	50DN	200

OPTIM® Fittings - Solvent Joint 32DN > 150DN — **AS/NZS 1260 : 2017**



Code	Size	Carton Qty
Reducing Junction M&F		
104.150.100.45	150 x 100 x 45°	5



Code	Size	Carton Qty
Male Thread Adaptor		
113.32	32DN	150
113.40	40DN	350
113.50	50DN	200

Code	Size	Carton Qty
Copper to PVC Connectors		
114.32	32DN	100
114.40	40DN	80
114.50	50DN	50
114.100	100DN	22



Code	Size	Carton Qty
Expansion Strap Boss (Bolted)		
119.80.50	80 x 50DN	50
119.100.50	100 x 50DN	50



Code	Size	Carton Qty
Strap Boss (Solvent)		
119.100.50S	100 x 50DN	25



Code	Size	Carton Qty
Sealed Clean Out		
120.100	100DN	45



e.g. 123.40.32
Spigot Socket

Code	Size	Carton Qty
Level Invert Reducer		
123.40.32	40 x 32DN	150
123.50.32	50 x 32DN	100
123.50.40	50 x 40DN	100
123.65.40	65 x 40DN	120
123.65.50	65 x 50DN	100
123.80.50	80 x 50DN	60
123.80.65	80 x 65DN	10
123.100.50	100 x 50DN	75
123.100.65	100 x 65DN	10
123.100.80	100 x 80DN	50
123.150.100	150 x 100DN	20



Code	Size	Carton Qty
In-Pipe Reducing Bush		
198.100.40	100 x 40DN	65
198.100.50	100 x 50DN	65
198.100.65	100 x 65DN	65
198.65.50	65 x 50DN	65
198.65.40	65 x 40DN	65



Code	Size	Carton Qty
Socket Reducing Bush		
124.40.32	40 x 32DN	300
124.50.40	50 x 40DN	200
124.65.40	65 x 40DN	200
124.65.50	65 x 50DN	10
124.80.50	80 x 50DN	150
124.100.50	100 x 50DN	50
124.100.65	100 x 65DN	10
124.100.80	100 x 80DN	65



Code	Size	Carton Qty
PVC – Ceramic Adaptor		
124.100S	100DN	45



Code	Size	Carton Qty
Ceramic – PVC Adaptor		
125.100S	100DN	10



Code	Size	Carton Qty
Concrete Slab Adaptor		
178.50	50	250
178.100P*	100	60

*One end fits inside pipe, other end fits inside pipe socket.



Code	Size	Carton Qty
Pan Connector F&F		
127.80	80DN	30
127.100	100DN	30



Code	Size	Carton Qty
Pan Connector M&F		
127C.100	CONCENTRIC 100DN	36
127M.100	OFFSET 100DN	36



Code	Size	Carton Qty
Inspection Pipe M&F		
129.100S	100DN	10



Code	Size	Carton Qty
Inspection Pipe F&F		
129.100	100DN	16



Code	Size	Carton Qty
Flashing Cone		
131.32	32DN	150
131.40	40DN	110
131.50	50DN	80
131.65	65DN	90
131.80	80DN	40
131.100	100DN	20

OPTIM® Fittings - Solvent Joint 32DN > 150DN — **AS/NZS 1260 : 2017**



Code	Size	Carton Qty
Access Plug Spigot End (32mm - 50mm)		
136.32	32DN	200
136.40	40DN	100
136.50	50DN	60



Access Plug Spigot End (80mm - 100mm)		
136.80	80DN	40
136.100	100DN	30



Screw Cap & Base Socket End		
136.100S	100DN	45
136C.100	100DN (Cap only)	45
136.150S	150DN	12
136C.150	150DN (Cap only)	40



Push On Cap		
137.32	32DN	200
137.40	40DN	100
137.50	50DN	100
137.65	65DN	200
137.80	80DN	100
137.100	100DN	50
137.150	150DN	40



Pipe Clip Saddle		
140.32	32DN	250
140.40	40DN	250
140.50	50DN	250
140.80	80DN	100
140.100	100DN	180



2 Part Aluminium Holder Bat		
140.80HB	80DN	25
140.100HB	100DN	50
140.150HB	150DN	50



Pipe Clip Stand Off		
140.32S	32DN	250
140.40S	40DN	250
140.50S	50DN	250
140.80S	80DN	100



Pipe Clip Side Hanger		
140.80H	80DN	100



Code	Size	Carton Qty
Vent Cowl		
150.50.40	50 & 40DN	200
150.65	65DN	150
150.80	80DN	80
150.100	100DN	40



Converge® PVC Aerator 100mm		
CONV.100.PVC	100DN	1
CONV.M10.CLIP	100DN	40

Inlets = 3 x 100DN, 3 x 65DN
Converge Mitre 10 Nutclip sold separately as per CONV. M10.CLIP code above.



Compakt® Boss Gully Trap		
COMP.100.50.40		12
COMP.INSERT		10

199mm(h)
100mm female floor inlet
65mm male outlet
50mm female inlet
40mm female inlet x 2
Includes removable siphon insert
(spares available to order as per COMP.INSERT code above)



4 Way Boss Junction M&F		
170.80.50.40.88	80 M&F BOSSES 50 x 40 x 40 x 40	15
170.100.50.4088	100 M&F BOSSES 50 x 50 x 40 x 40	20



Adjustable Floor Waste Gully		
159.80.50P	80 x 50DN	30
159.80.65P	80 x 65DN	28
159.100.50P	100 x 50DN	20
159.100.65P	100 x 65DN	12
159.100.100P	100 x 100DN	12



Collar		
172.100	100DN	30



Gully Collar & Grate (Loose Fit Top)		
168.100L	100DN	30



Dome Collar & Grate (Loose Fit Top)		
168.100D	100DN	30



Dome Grate		
172.G.100	100DN	30

OPTIM® Fittings - Solvent Joint 32DN > 150DN — **AS/NZS 1260 : 2017**



Code	Size	Carton Qty
Floor Grate for Tile Floors		
168.80RDW	White PVC (Round) 80DN	10
168.100RDW	100DN	10



Leak Control Floor Flange		
126.80.LC80	80DN	40
126.100.LC100	100DN	40

(For vinyl remove lugs from LC80)



Code	Size	Carton Qty
Vinyl Rite Floor Waste System (Round)		
VR100SS	Stainless Steel (Vinyl Floors) 100DN	10



Shower Waste Kits for Tile Floors (Square)		
TK80SC	Chrome on Brass Grate 80DN	1



Tile Floor Flange & Grate Combo (Square)		
TFW80SC	Flange with Chrome Grate 80DN	1

PVC Primer, Solvent, Lubricant



Code	Size	Carton Qty
Marley "Gold" AS/NZS 3879 For both high and low pressure applications		
MG125	Marley Gold 125ml	10
MG250	Marley Gold 250ml	10
MG500	Marley Gold 500ml	10
MG4000	Marley Gold 4 litre	4



Marley "Clear" For low pressure applications only		
SC125C	Marley Clear 125ml	10
SC250C	Marley Clear 250ml	10





Code	Size	Carton Qty
Gap Filling Jointing For parallel and clearance fit joints		
CF1000GF	Gap Filling Primer Red	1 litre
GF1000C	Gap Filling Cement Clear (Type G)	1 litre

Primer to Cement ratio = 1:2 (approx.)



Solvent Joint Primer (Pink Tint) AS/NZS 3879		
CF500	Marley Joint Primer 500ml	12
CF4000	Marley Joint Primer 4 litre	4



Joint Lubricant		
JL250	RRJ Lubricant 275g (TUBE)	42
JL500	RRJ Lubricant 500g (POT)	18
JL2000	RRJ Lubricant 2kg (POT)	6

Note: for Marley Rainwater systems use only colour matched Marley MCS Solvent Welding Cement.

OPTIM® Fittings - Rubber Ring Joint 100DN > 150DN — **AS/NZS 1260 : 2017**



Plain Bend F&F

Code	Size	Carton Qty
1501.100.45	100 x 45°	30
1501.100.88	100 x 88°	20
1501.150.45	150 x 45°	6
1501.150.88	150 x 88°	6

*This item is fabricated.



M&F Spigot Bend

Code	Size	Carton Qty
1571.100.5	100 x 5°	30
1571.100.11	100 x 11°	30
1571.100.15	100 x 15°	27
1571.100.22	100 x 22°	30
1571.100.30	100 x 30°	27



Side Access Bend

Code	Size	Carton Qty
1503.100.45	100 x 45°	10
1503.100.88	100 x 88°	10



Plain Junction Spigot End

Code	Size	Carton Qty
1504.150.45	150 x 45°	4



Reducing Junction Spigot End

Code	Size	Carton Qty
1504.150.100.45	150 x 100 x 45°	6



Side Access Junction

Code	Size	Carton Qty
1505.100.45LH	100 x 45°	10
1505.100.45RH	100 x 45°	10



Plain Junction F&F

Code	Size	Carton Qty
1504.100.45	100 x 45°	10
1504.100.88	100 x 88°	10
1504.150.45F	150 x 45°	6
1504.150.88F	150 x 88°	6
1504.150.100Y.F	REDUCING 150 x 100 x 45°	6



Ring Seal Coupler

Code	Size	Carton Qty
1511.150	150DN	12



Fresh Air Inlet

Code	Size	Carton Qty
1516.100	100DN	10



Level Invert Reducer

Code	Size	Carton Qty
1523.100.80	100 x 80DN	40
1523.150.100	150 x 100DN	12



PVC - Ceramic Adaptor

Code	Size	Carton Qty
1524.100	100DN	8



Pressure / Sewer Adaptor

Code	Size	Carton Qty
1524.114.100	114 x 100DN	10



Ceramic - PVC Adaptor

Code	Size	Carton Qty
125.100S	100DN	10



Access Pipe M&F

Code	Size	Carton Qty
1529.100	100DN	10



Combination Standard / Slip Coupler

Code	Size	Carton Qty
1511.100C	100DN	40
1511S.150	150DN	15



Septic Tank Junction

Code	Size	Carton Qty
1514.100.88	100 x 88°	10



Screw Cap & Base (Solvent Socket)

Code	Size	Carton Qty
136.100S	100DN	20
136C.100	100DN (Cap Only)	10
136.150S	150DN	12
136C.150	150DN (Cap Only)	10



Push On Cap (Solvent)

Code	Size	Carton Qty
137.100	100DN	50
137.150	150DN	40



Adjustable Gully Trap

Code	Size	Carton Qty
1559.100A	100DN	10



Gully Dish

Code	Size	Carton Qty
1575.100	100DN Outlet Complete with Lid	10
1575L.100	100DN Lid Only	10

*These products are not licensed to AS/NZS 1260.



Gully Dish Riser

Code	Size	Carton Qty
1575R.100.100	100mm High	6
1575R.100.200	200mm High	6
1575R.100.300	300mm High	6

FOLLOW US

Sustainable Manufacturing

Marley is committed to creating environmentally sustainable processes and products and was the first plastics manufacturer in New Zealand to achieve ISO14001 registration. We are also Best Environmental Practice certified for our entire range of manufactured uPVC systems. This means we get our raw materials from sustainable and responsible sources, continuously work on our manufacturing processes to reduce our environmental footprint and accept our products back at the end of their useful life for recycling.

BEST ENVIRONMENTAL PRACTICE

AS/NZS 5395: 2024
LICENSE No 2969

CERTIFIED ISO 9001 ISO 14001

PROUD SUPPORTERS OF CERTIFIED RENEWABLE ELECTRICITY GENERATION

NZGBC TE KAUNIHERA HANGANGA TAUTAIAO Member 2025–2026

Disclaimer

This technical catalogue has been compiled by Marley New Zealand Limited ("The Company") to promote better understanding of the technical aspects of the Company's products to assist users in obtaining from them the best possible performance. The technical catalogue is supplied subject to acknowledgment of the following conditions:

The technical catalogue is protected by Copyright and may not be copied or reproduced in any form or by any means in whole or in part without prior consent in writing by the Company. Product specifications, usage data and advisory information may change from time to time with advances in research and field experience. The Company reserves the right to make such changes at any time without notice. Correct usage of the Company's products involve engineering judgements which cannot be properly made without full knowledge of all the conditions pertaining to each specific installation. The Company expressly disclaims all and any liability to any person whether supplied with this publication or not in respect of anything and of the consequences of anything done or omitted to be done by any such person in reliance whether whole or partial upon the whole or any part of the contents of this publication. No offer to trade, nor any conditions of trading, are expressed or implied by the issue or content of this manual. Nothing herein shall override the Company's Conditions of Sale, which may be obtained from the Registered Office or any Sales Office of the Company. This technical catalogue is and shall remain the property of the Company, and shall be surrendered on demand to the Company. Actual colours may vary slightly from those shown. For a more accurate colour comparison, please request a product sample.

MAR6885 June 2026

Our Partners

Master Plumbers® Representing Excellence

Accredited Partner MASTER ELECTRICIANS Electrical Contractors Association of NZ

New Zealand Certified Builders Association NZCB

REGISTERED MASTER BUILDERS ASSOCIATE MEMBER

SPEC ASSIST

MEMBER OF ROOFING ASSOCIATION NZ

For more information: **0800 MARLEY (0800 627539)** | **www.marley.co.nz**

MARLEY by aliaxis